Fenner®

Installation and Maintenance

SERIES M GEARMOTORS

2

IMPORTANT: HEALTH & SAFETY AT WORK

It is essential that such matters as application, mounting position, maximum ratings, overhung loads, etc. should be thoroughly investigated before installation. Technical information relating to Fenner Gearmotors is given in our Drive Design and Maintenance Manual available from the address stated below. If this Design Manual does not supply all the information required you should contact your local supplier. However, before a proper reply can be given we may need to ascertain the precise application in use or proposed.

LUBRICATION

GEARMOTORS AND REDUCER (SIZES 860 TO 863)

Motorised and Reducer types of sizes 860 to 863 are supplied ready filled with the appropriate amount of lubricant for the mounting position identified in the original order. (If the unit is to be mounted in a different position to that originally intended then the amount of lubricant in the unit will require amending - see table below for required quantities).

GEARMOTORS AND REDUCERS (SIZES 864 TO 868)

Motorised and Reducer types of sizes 864 to 868 are despatched without oil for the customer to fill on site once installed. The different mounting positions are indicated with the appropriate oil fill quantities. The units have several oil fill and drain plugs to cater for all mounting positions. A list of approved lubricants is supplied in the table below. Sizes 864 to 868 require an oil change at 10,000 hours mineral oil, 20,000 hours synthetic oil.

RECOMMENDED OIL GRADES

Supplier	Mineral Oils Containing EP Additives	Synthetic Lubricants Polyalpholefin based
BP	Energol GR-XP	Enersyn EPX
Castrol	Alpha SP	Alphasyn EP or T
Esso	Spartan EP	Spartan Synthetic EP
Fuchs	Renogear V	Renogear SG
Mobil	Mobilgear 600	Mobilgear SHC
Shell	Omala	Omala HD
Texaco	Meropa	Pinnacle EP
Total	Carter EP	Carter SP
Rocol	Sapphire Hi-Torque	

LUBRICANT TYPE / TEMPERATURE RANGE

ISO Viscosity	Ambient Temperature °C			
	-5°C to 20°C	-30°C to 20°C	0°C to 35°C	20°C to 50°C
EP Mineral Oil	220	-	320	460
Synthetic Oil	-	220	220	320

BREATHERS/MOUNTING POSITIONS

Sizes 862 to 868 Gearmotors are supplied for operations with breathers. To prevent leakage during transit the units are fitted with blanking plugs. It is essential that when the unit is in its operating position the blanking plug is removed and replaced by the breather plug (not supplied) as shown below.

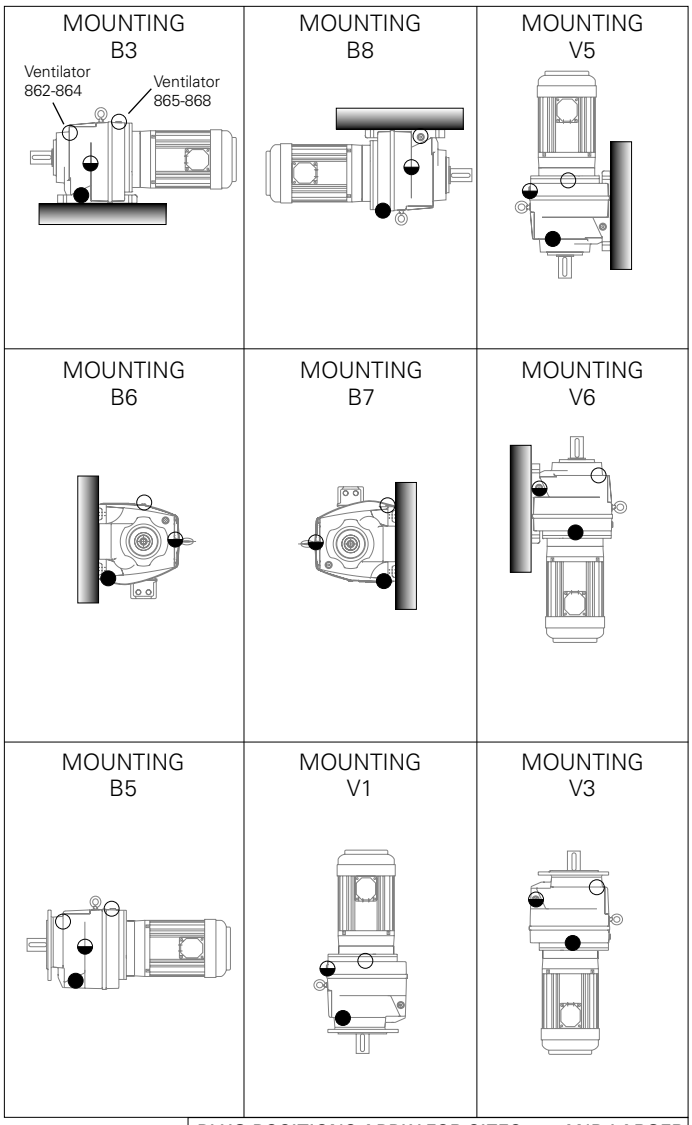

PLUG POSITIONS APPLY FOR SIZES 862 AND LARGER

- ○ VENTILATOR/FILLING POSITION
- ◒ LEVEL POSITION
- ● DRAIN POSITION

LUBRICANT CAPACITY (LITRES) - FENNER SERIES M GEARMOTORS

Mounting Position	860		801		861		802		862		803		863		864		865		866		867		868	
	Double	Triple	Double	Triple	Double	Triple	Double	Triple	Double	Triple	Double	Triple	Double	Triple	Double	Triple	Double	Triple	Double	Triple	Double	Triple	Double	Triple
B3/B5	0.7	0.7	0.8	0.7	0.8	0.7	1.5	1.3	1.5	1.3	2.0	1.9	2.6	2.3	3.7	3.4	10.5	11.5	11	11	17	17	24	24
B7	0.7	0.7	0.8	0.7	0.8	0.7	1.8	1.6	1.8	1.6	2.0	1.8	3.1	2.9	6.2	6.0	12.0	11.5	22	23	31	33	49	50
B6	0.7	0.7	0.8	0.8	0.8	0.8	1.6	1.5	1.6	1.5	1.8	1.7	2.8	2.6	5.4	5.8	12.0	11.5	22	23	31	33	49	50
B8	0.7	0.7	0.8	0.8	0.8	0.8	1.9	1.9	1.9	1.9	2.1	2.1	3.3	3.3	7.3	7.9	12.0	11.5	19	20	28	30	41	43
V1/V5	1.0	1.0	1.5	1.4	1.5	1.4	1.9	1.9	1.9	1.9	2.1	1.9	3.2	2.9	6.4	6.4	16.8	16.8	32	32	47	47	72	72
V3/V6	1.0	1.1	1.5	1.5	1.5	1.5	2.7	2.5	2.7	2.5	2.9	2.7	4.9	4.7	9.1	9.3	16.4	16.5	26	27	38	40	65	67

Oil quantities are approximate, fill gearbox until oil escapes from level plug hole. Do not over fill as excess lubricant may cause overheating and leakage.

® Registered Trade Mark of WYKO Industrial Services
Fenner is a registered Trade Mark of Fenner PLC
All Dimensions are in Millimetres unless otherwise stated

08700 106610
Head Office: Amber Way, Halesowen, West Midlands. B62 8WG

Fenner®
www.fptgroup.com

THREADED HOLE DETAILS

UNIT SIZE		INPUT SHAFT	OUTPUT SHAFT
860		M5 x 12 mm deep	M6 x 16 mm deep
801		M5 x 12 mm deep	M10 x 22 mm deep
861		M5 x 12 mm deep	M10 x 22 mm deep
802	D	M6 x 16 mm deep	M10 x 22 mm deep
	T	M5 x 12 mm deep	
862	D	M6 x 16 mm deep	M12 x 28 mm deep
	T	M5 x 12 mm deep	
803	D	M6 x 16 mm deep	M12 x 28 mm deep
	T	M5 x 12 mm deep	
863	D	M8 x 19 mm deep	M16 x 36 mm deep
	T	M6 x 16 mm deep	
864	D	M10 x 22 mm deep	M16 x 36 mm deep
	T	M8 x 19 mm deep	
865	D	M12 x 28 mm deep	M20 x 42 mm deep
	T	M10 x 22 mm deep	
866	D	M16 x 36 mm deep	M20 x 42 mm deep
	T	M12 x 28 mm deep	
867		M20 x 42 mm deep	M24 x 50 mm deep
868		M20 x 42 mm deep	M24 x 50 mm deep

D = Double reduction
T = Triple reduction

FITTING COMPONENTS TO EITHER THE UNIT INPUT OR OUTPUT SHAFT

The input or output shaft extension diameter tolerance is to ISO tolerance k6 (for shaft diameter < 50mm) and m6 (for shaft diameter> 50mm) and fitted components should be to ISO tolerance M7(for bore diameter < 50mm) and K7 (for bore diameter > 50mm).

INSTALLATION

These are supplied as either free standing units, or if required, mounted on a standard baseplate with a foot mounted motor correctly aligned and connected to a Fenner Flexible coupling.

Clean shaft extensions and ventilator where fitted

The shafts of the unit and driven equipment should be in as perfect alignment as possible. Fenaflex® couplings should be used when shaft alignment cannot be assured and also when protection from peak and vibrating torques are desirable.

Sprockets, pulleys etc. should be fitted with a Taper Lock® bush or a screwing jack device.

DO NOT drive any item on to the shaft as this may cause internal damage to gears and bearings. Position as close to the unit as possible allowing sufficient clearance.

FIXING TO CUSTOMERS EQUIPMENT

FIXING TIGHTENING TORQUES

Set Screw Size	Tightening Torque	
	Feet / Flange Mounting torque Nm	Motor to Gearhead Nm
M6	10	10
M8	25	18
M10	50	37
M12	85	64
M16	200	150
M20	350	260
M24	610	-
M30	1220	-
M36	2150	-

FOOT MOUNTED UNITS

The drive should be mounted on a rigid support and bolted down firmly using set screws to ISO grade 8.8 minimum. Ensure that machined mounting points are supported over their full area. If packing is to be used, place either side of the mounting bolt. During the final bolting down ensure the unit and/or baseplate are not distorted to maximise unit performance.

For units mounted on bedplates, dowel two diagonally opposite feet in to position.

Fit all guards required to comply with the factory acts, check the motor wiring for correct direction of rotation and check oil levels.

MOTOR CONNECTIONS TO MAINS

Connection of the electric motor to the mains supply should be made by a qualified person.The current rating of the motor will be identified on the motor plate and correct sizing of the cables to electrical regulations is essential.

MOTOR TERMINAL CONNECTIONS

THREE PHASE MOTORS

Standard motors are supplied dual wound and suitable for DOL starter controls: terminal box connections should be made in accordance with the diagram inside the terminal box cover, also identified below.

Delta connections for lower voltage* operation of motors up to 100 frame and upper voltage* for motors above 100 frame size.

Star connection for upper voltage* operation of motors up to 100 frame size.

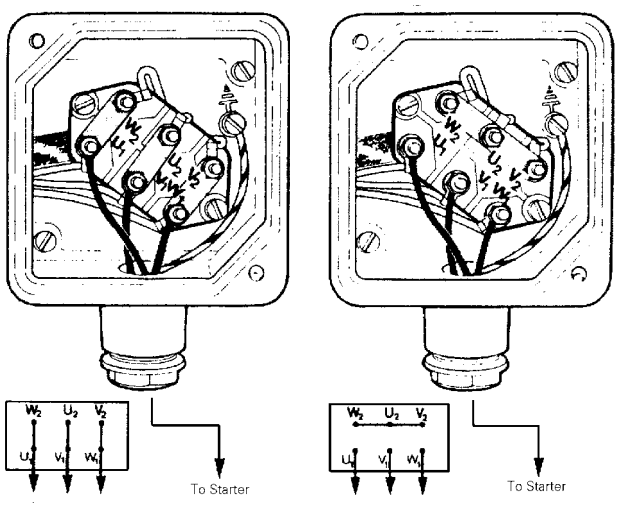

* For normal UK 3-phase supply, the lower voltage is usually within the range 220/240V and upper voltage 380/420V (often quoted 415V spot).

TERMINAL MARKINGS AND DIRECTION OF ROTATION

In accordance with the current standard, if the supply is connected to the motor's stator terminals, which are marked U1, V1 and W1 and the phase sequence of the supply is 1, 2 and 3, the direction of rotation will be clockwise when viewed from the drive-end of the motor shaft.

® Registered Trade Mark of WYKO Industrial Services
Fenner is a registered Trade Mark of Fenner PLC
All Dimensions are in Millimetres unless otherwise stated

08700 106610
Head Office: Amber Way, Halesowen, West Midlands. B62 8WG

Fenner Series M – Dimensions Motorised

DIMENSIONS

FOOT MOUNTED

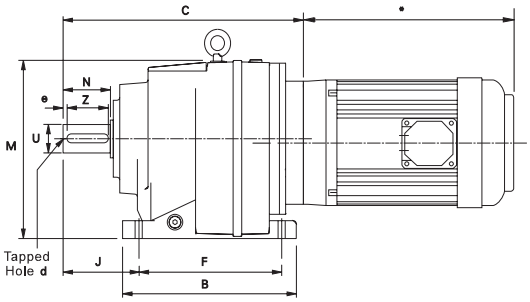

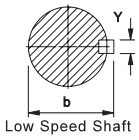

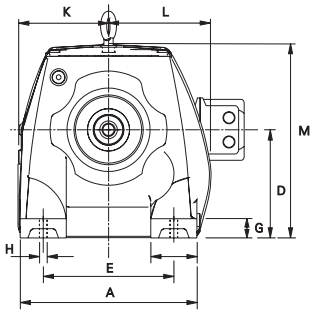

FLANGE MOUNTED

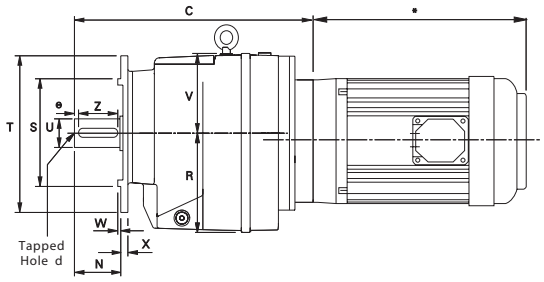

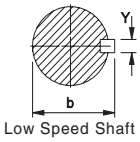

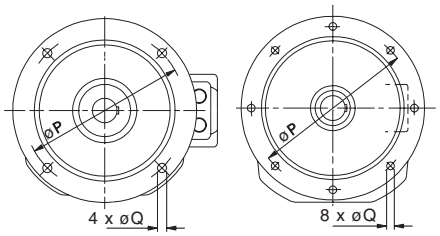

4 holes Q dia
on P. p.c.d.
(sizes 860-864)

8 holes Q dia
on P. p.c.d.
(sizes 865-868)

*for motor dimensions see page 103

DIMENSIONS

Unit Size	A	B	D	E	F	G	H	J	K	L	M	N	P	Q	R	S*	T*	U	V	W	X	Y	Z	d	b	e
860	135	131	75	110	110	12	10	58	76	76	149	40	130	9.0	76	110	160	20/k6	74	3.5	10	6	32	M6	22.5	4
801	145	152	90	110	130	16	10	75	84	86	180	50	130	9.0	91	110	160	25/k6	90	3.5	10	8	40	M10	28.0	4
861	145	152	90	110	130	16	10	75	84	86	180	50	165	11.0	91	130	200	25/k6	90	3.5	10	8	40	M10	28.0	4
802	190	200	115	135	165	20	15	90	97	107	208	60	165	11.0	115	130	200	30/k6	93	3.5	11	8	50	M10	33.0	4
862	190	200	115	135	165	20	15	100	97	107	208	70	215	13.5	115	180	250	35/k6	93	4.0	11	8	60	M12	33.0	7
803	210	235	130	150	195	24	15	100	110	110	214	70	215	13.5	130	180	250	35/k6	84	4.0	11	10	60	M12	38.0	7
863	230	245	140	170	205	25	19	115	119	133	250	80	265	13.5	140	230	300	40/k6	110	4.0	11	12	70	M16	43.0	5
864	290	310	180	215	260	35	19	140	167	153	310	100	300	17.5	182	250	350	50/k6	130	5.0	17	14	80	M16	53.5	10
865	340	365	225	250	310	40	23	160	200	172	394	120	400	18.0	230	350	450	60/m6	169	5.0	18	18	100	M20	64.0	10
866	400	440	250	290	370	45	27	185	225	203	446	140	400	18.0	260	350	450	70/m6	196	5.0	22	20	110	M20	74.5	15
867	450	490	265	340	410	50	34	220	242	228	483	170	500	18.0	278	450	500	90/m6	218	5.0	25	25	140	M24	95.0	15
868	530	590	300	380	500	50	41	260	278	268	551	210	500	18.0	318	500	500	100/m6	251	5.0	25	28	180	M24	106.0	15

For selection and ratings of reducer assemblies consult your local Authorised Distributor.

*The unit will be supplied with this plug diameter unless otherwise specified. For a list of alternative flange diameters see table below.

DIMENSION 'C' FOR ALL UNITS

Unit Size		Motor Frame Size												
		63	71	80	90	100	112	132	160	180	200	225	250	280
860	Double	209	213	226	236									
	Triple	224	228	241	251									
801	Double	240	244	257	267									
	Triple	253	257	270	280									
861	Double	240	244	257	267									
	Triple	253	257	270	280									
802	Double			294	304	329	329							
	Triple	300	304	317	327									
862	Double			304	314	339	339							
	Triple	310	314	327	337									
803	Double			325	335	360	360							
	Triple	331	335	348	358									
863	Double			362	372	382	382	384						
	Triple			377	387	412	412							
864	Double			442	442	442	442	442	448					
	Triple			462	472	482	482							
865	Double			524	523	523	523	523	564	564	564	591		
	Triple			549	549	555	555							
866	Double					596	596	596	631	631	631	658		
	Triple			647	647	647	647	647	688	688				
867	Double					717	717	717	710	710	710	710	710	710
	Triple						779	779	772	772	772	772		
868	Double					832	832	832	825	825	825	825	825	825
	Triple						904	904	897	897	897	897		

ALTERNATIVE GEARBOX FLANGE SIZES

Unit Size	P	Q	S	T	W	X
860	100	9	80	120	3	9
	115	9	95	140	3	9
	165	11	130	200	3.5	10
801	100	6.6	80	120	3	10
	115	9	95	140	3	10
	165	11	130	200	3.5	10
861	100	6.6	80	120	3	10
	115	9	95	140	3	10
	130	9	110	160	3.5	10
802	115	9	95	140	3	11
	130	9	110	160	3.5	11
	215	13.5	180	250	4	11
862	115	9	95	140	3	11
	130	9	110	160	3.5	11
	165	11	130	200	3.5	11
803	165	11	130	200	4	11
	265	13.5	230	300	4	11
863	165	11	130	200	3.5	11
	215	13.5	180	250	4	11
864	265	13.5	230	300	4	17

QUINTUPLE REDUCTION - Flange mounted

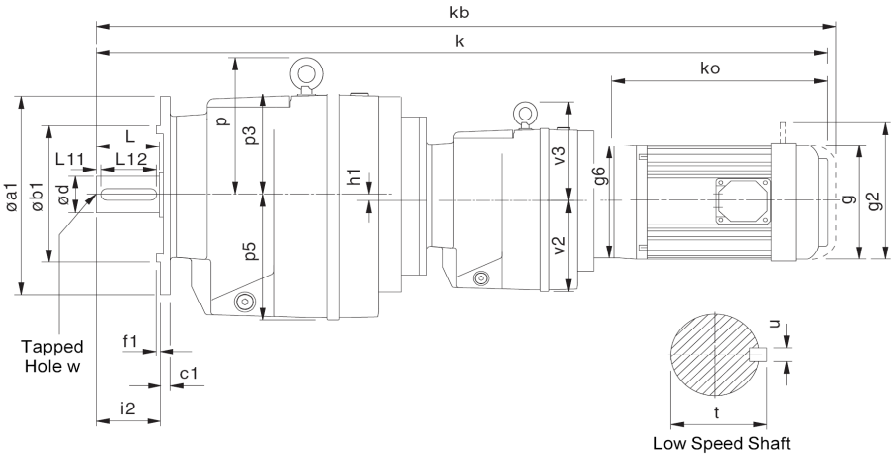

SIZE 861-864

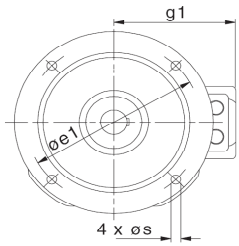

SIZE 865-868

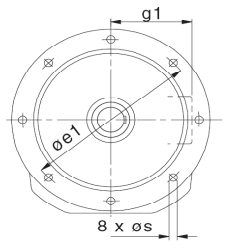

SIZE	øa1	øb1	c1	øe1	f1	h1	i2	p	p3	p5	s	v2	v3	Low Speed Shaft d	L	L11	L12	t	u	w
861	120	80	10	100	3	-	50	-	89	91	6.6	76	-	25 k6	50	4	40	28	8	M10 x 1.5 22 deep
	140	95	10	115	3		50				9									
	160	110	10	130	3.5		50				9									
	200	130	10	165	3.5		50				11									
802	140	95	11	115	3	-	60	-	91	115	9	91	-	30 k6	60	4	50	33	8	M10 x 1.5 22 deep
	160	110	11	130	3.5		60				9									
	200	130	11	165	3.5		60				11									
	250	180	11	215	4		60				13.5									
862	140	95	11	115	3	-	70	-	91	115	9	91	-	35 k6	70	7	60	38	10	M12 x 1.75 28 deep
	160	110	11	130	3.5		70				9									
	200	130	11	165	3.5		70				11									
	250	180	11	215	4		70				13.5									
803	200	130	11	165	4	14.5	70	113	81	130	11	91	-	35 k6	70	7	60	38	10	M12 x 1.75 28 deep
	250	180	11	215	4		70				13.5									
	300	230	11	265	4		70				13.5									
863	200	130	11	165	3.5	-	80	152	107	140	11	91	-	40 k6	80	5	70	43	12	M16 x 2.0 36 deep
	250	180	11	215	4		80				13.5									
	300	230	11	265	4		80				13.5									
864	300	230	17	265	4	-	100	175	125	182	13.5	115	-	50 k6	100	10	80	53.5	14	M16 x 2.0 36 deep
	350	250	17	300	5		100				17.5									
865	450	350	18	400	5	-	140	198	-	230	18	115	-	60 m6	120	10	100	64	18	M20x2.5 42 deep
866	450	350	22	400	5	-	140	245	-	260	18	140	155	70 m6	140	15	110	74.5	20	M20x2.5 42 deep
867	550	450	25	500	5	-	170	288	-	278	18	140	155	90 m6	170	15	140	95	25	M24x3.0 50 deep
868	550	450	25	500	5	-	210	320	-	318	18	140	155	100 m6	210	15	180	106	28	M24x3.0 50 deep

Motor Frame Size	All Sizes					**861**		**802**		**862**		**803**		**863**		**864**		**865**		**866**		**867**		**868**	
	ko	g	g1	g2	g6	k	kb	k	kb	k	kb	k	kb	k	kb	k	kb	k	kb	k	kb	k	kb	k	kb
63	218	122	96	160	140	659	704	725	770	735	780	756	801	793	838	900	945	981	1026						
71	221	138	102	167	105	666	711	732	777	742	787	763	808	800	845	907	952	988	1033						
80A	239	157	125	190	120	697	750	763	808	773	826	794	847	831	884	938	991	1019	1072	1132	1185	1253	1306	1368	1421
80B	248	157	125	190	120	706	759	772	817	782	835	803	856	840	893	947	1000	1028	1081	1141	1194	1262	1315	1377	1430
90S	260	177	133	218	140	728	780	794	847	804	856	825	877	862	914	969	1021	1050	1102	1163	1215	1284	1336	1399	1451
90L	275	177	133	218	140	743	795	809	862	819	871	840	892	877	929	984	1036	1065	1117	1178	1230	1299	1351	1414	1466
90LA	284	177	133	218	140	752	804	818	870	828	880	849	901	886	938	993	1045	1074	1126	1187	1239	1308	1360	1348	1400
100L	310	197	144	238	160															1238	1298	1359	1419	1474	1534

kb - for brake motors
g2 - hand release if required

all parallel keys are to DIN 6885

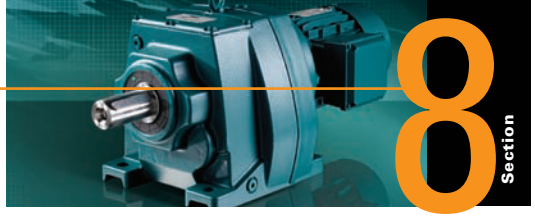

FOOT MOUNTED - DOUBLE AND TRIPLE REDUCTIONS

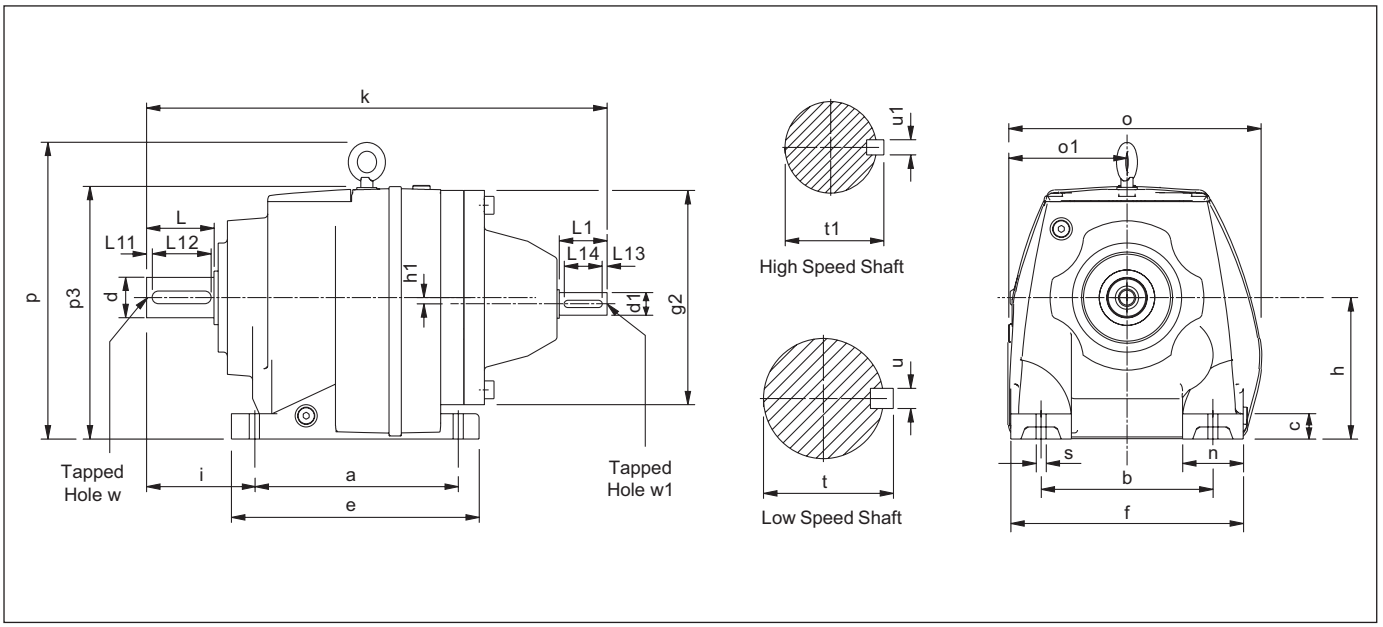

SIZE	a	b	c	e	f	g2	h	h1	i	Double k	Triple k	n	o	o1	p	p3	s
860	110	110	12	131	135	140	75	-	58	286	301	25	152	76	-	149	10
801	130	110	16	152	145	140	90	-	75	317	330	35	170	84	-	180	10
861	130	110	16	152	145	140	90	-	75	317	330	35	170	84	-	180	10
802	165	135	20	200	190	180	115	-	90	369	377	55	204	97	-	208	15
862	165	135	20	200	190	180	115	-	100	379	387	55	204	97	-	208	15
803	195	150	24	235	210	180	130	14.5	100	400	408	60	220	110	246	214	15
863	205	170	25	245	230	212	140	-	115	440	452	60	252	119	295	250	19
864	260	215	35	310	290	250	180	-	140	555	540	75	320	167	360	310	19
865	310	250	40	365	340	300	225	-	160	660	662	90	372	200	433	394	23
866	370	290	45	440	400	360	250	-	185	782	784	110	428	225	505	446	27
867	410	340	50	490	450	400	265	-	220	907	969	110	470	242	563	483	34
868	500	380	50	590	530	460	300	-	260	1022	1094	150	546	278	630	551	41

SIZE	High Speed Shaft							Low Speed Shaft						
	d1	L1	L13	L14	t1	u1	w1	d	L	L11	L12	t	u	w
860	16 k6	40	4	32	18.0	5	M5 x 0.8 x 12 deep	20 k6	40	4	32	22.5	6	M6 x 1.0 x 16 deep
801	16 k6	40	4	32	18.0	5	M5 x 0.8 x 12 deep	25 k6	50	4	40	28.0	8	M10 x 1.5 x 22 deep
861	16 k6	40	4	32	18.0	5	M5 x 0.8 x 12 deep	25 k6	50	4	40	28.0	8	M10 x 1.5 x 22 deep
802 *	19 k6	40	4	32	21.5	6	M6 x 1.0 x 16 deep	30 k6	60	4	50	33.0	8	M10 x 1.5 x 22 deep
862 *	19 k6	40	4	32	21.5	6	M6 x 1.0 x 16 deep	35 k6	70	7	60	38.0	10	M12 x 1.75 x 28 deep
803 *	19 k6	40	4	32	21.5	6	M6 x 1.0 x 16 deep	35 k6	70	7	60	38.0	10	M12 x 1.75 x 28 deep
863 *	24 k6	50	5	40	27.0	8	M8 x 1.25 x 19 deep	40 k6	80	5	70	43.0	12	M16 x 2.0 x 36 deep
864 *	28 k6	60	5	50	31.0	8	M10 x 1.5 x 22 deep	50 k6	100	10	80	53.5	14	M16 x 2.0 x 36 deep
865 *	38 k6	80	5	70	41.0	10	M12 x 1.75 x 28 deep	60 m6	120	10	100	64.0	18	M20 x 2.5 x 42 deep
866 *	42 k6	110	10	70	45.0	12	M16 x 2.0 x 36 deep	70 m6	140	15	110	74.5	20	M20 x 2.5 x 42 deep
867	55 m6	110	10	90	59.0	16	M20 x 2.5 x 42 deep	90 m6	170	15	140	95.0	25	M24 x 3.0 x 50 deep
868	55 m6	110	10	90	59.0	16	M20 x 2.5 x 42 deep	100 m6	210	15	180	106.0	28	M24 x 3.0 x 50 deep

* Triple reduction units have different input shaft dimensions to those shown, refer to the table on page 213 for details.

Fenner M series Quadruple Reduction Geared Motor

FOOT MOUNTED

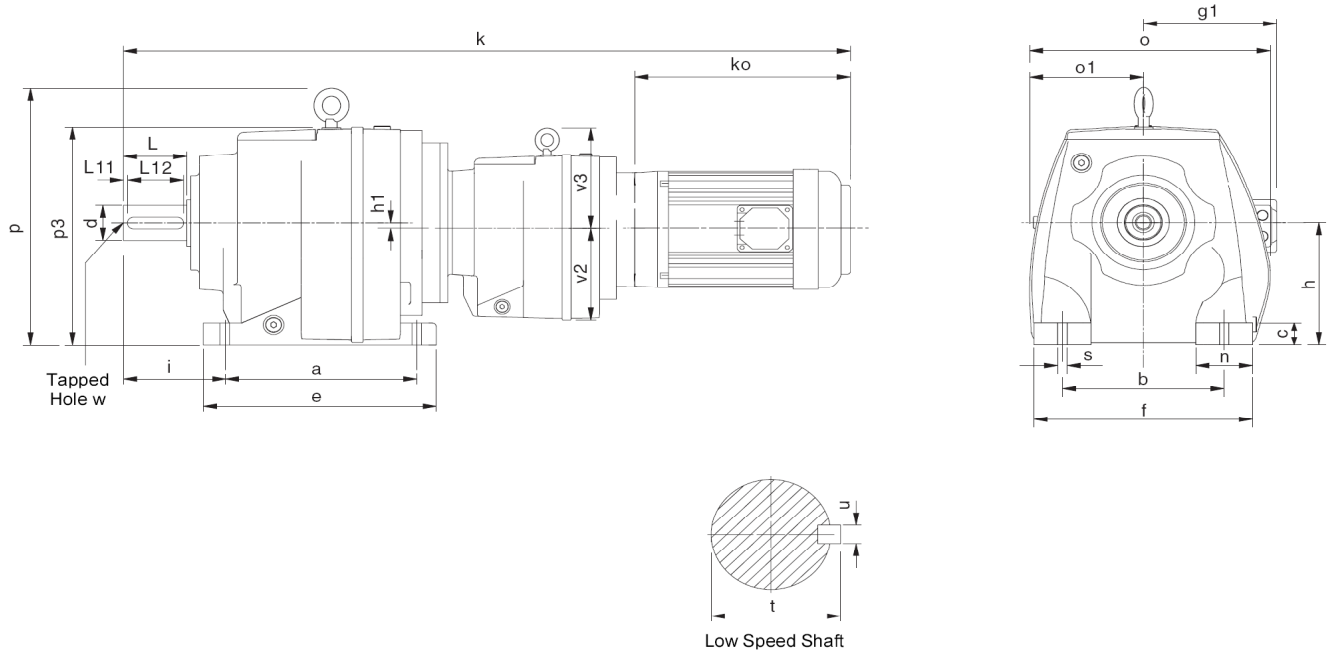

Unit Size	a	b	c	e	f	h	h1	i	n	o	o1	p	p3	s	v2	v3	d	L	L11	L12	t	u	w	kg *
861	130	110	16	152	145	90	-	75	35	170	84	-	180	10	76	-	25 k6	50	4	40	28	8	M10 x 1.5 x 22	23
802	165	135	20	200	190	115	-	90	55	204	97	-	208	15	91	-	30 k6	60	4	50	33	8	M10 x 1.5 x 22	37
862	165	135	20	200	190	115	-	100	55	204	97	-	208	15	91	-	35 k6	70	7	60	38	10	M12 x 1.5 x 22	37
803	195	150	24	235	210	130	14.5	100	60	220	110	246	214	15	91	-	35 k6	70	7	60	38	10	M12 x 1.5 x 22	42
863	205	170	25	245	230	140	-	115	60	252	119	295	250	19	115	-	40 k6	80	5	70	43	12	M16 x 2.0 x 36	48
864	260	215	35	310	290	180	-	140	75	320	167	360	310	19	115	-	50 k6	100	10	80	53.5	14	M16 x 2.0 x 36	97
865	310	250	40	365	340	225	-	160	90	372	200	433	394	23	115	-	60 m6	120	10	100	64	18	M20 x 2.5 x 42	145
866	370	290	45	440	400	250	-	185	110	428	225	505	446	27	140	155	70 m6	140	15	110	74.5	20	M20 x 2.5 x 42	197

* Weight shown is for a typical gearhead excluding motor - see table below for additional motor weight

MOTOR OPTIONS AVAILABLE (using 4 pole motors)

Unit Size	kW	Frame	IEC	ko	k	g1	Motor kg
861	0.12	63A	B14	193	619	113	6.6
	0.18	63B	B14	193	619	113	6.9
	0.25	71A	B14	218	648	121	8.7
	0.37	71B	B14	218	648	121	10.4
	0.55	80A	B14	236	679	130	12.7
	0.75	80B	B14	236	679	130	13.6
	1.1	90S	B14	280	733	150	18.2
	1.5	90L	B14	280	733	150	20.1
802	0.12	63A	B14	193	687	113	6.6
	0.18	63B	B14	193	687	113	6.9
	0.25	71A	B14	218	716	121	8.7
	0.37	71B	B14	218	716	121	10.4
	0.55	80A	B14	236	747	130	12.7
	0.75	80B	B14	236	747	130	13.6
	1.1	90S	B14	280	801	150	18.2
	1.5	90L	B14	280	801	150	20.1
862	0.12	63A	B14	193	697	113	6.6
	0.18	63B	B14	193	697	113	6.9
	0.25	71A	B14	218	726	121	8.7
	0.37	71B	B14	218	726	121	10.4
	0.55	80A	B14	236	757	130	12.7
	0.75	80B	B14	236	757	130	13.6
	1.1	90S	B14	280	811	150	18.2
	1.5	90L	B14	280	811	150	20.1
803	0.12	63A	B14	193	718	113	6.6
	0.18	63B	B14	193	718	113	6.9
	0.25	71A	B14	218	747	121	8.7
	0.37	71B	B14	218	747	121	10.4
	0.55	80A	B14	236	778	130	12.7
	0.75	80B	B14	236	778	130	13.6
	1.1	90S	B14	280	822	150	18.2
	1.5	90L	B14	280	822	150	20.1

Unit Size	kW	Frame	IEC	ko	k	g1	Motor kg
863	0.12	63A	B14	193	755	113	6.6
	0.18	63B	B14	193	755	113	6.9
	0.25	71A	B14	218	784	121	8.7
	0.37	71B	B14	218	784	121	10.4
	0.55	80A	B14	236	815	130	12.7
	0.75	80B	B14	236	815	130	13.6
	1.1	90S	B14	280	869	150	18.2
	1.5	90L	B14	280	869	150	20.1
864	0.55	80A	B14	236	912	130	12.7
	0.75	80B	B14	236	912	130	13.6
	1.1	90S	B14	280	966	150	18.2
	1.5	90L	B14	280	966	150	20.1
	2.2	100LA	B14	316	1057	160	25.8
	3	100LB	B14	316	1057	160	25.8
865	0.55	80A	B14	236	993	130	12.7
	0.75	80B	B14	236	993	130	13.6
	1.1	90S	B14	280	1047	150	18.2
	1.5	90L	B14	280	1047	150	20.1
	2.2	100LA	B14	316	1138	160	25.8
	3	100LB	B14	316	1138	160	25.8
866	0.55	80A	B14	236	1114	130	12.7
	0.75	80B	B14	236	1114	130	13.6
	1.1	90S	B14	280	1168	150	18.2
	1.5	90L	B14	280	1168	150	20.1
	2.2	100LA	B14	316	1244	160	25.8
	3	100LB	B14	316	1244	160	25.8
	4	112M	B14	333	1231	180	41.9
	5.5	132S	B14	410	1310	207	54.9
	7.5	132M	B14	410	1310	207	69.0